REV	LTR	DESCRIPTION	DATE	REVISER	APPD

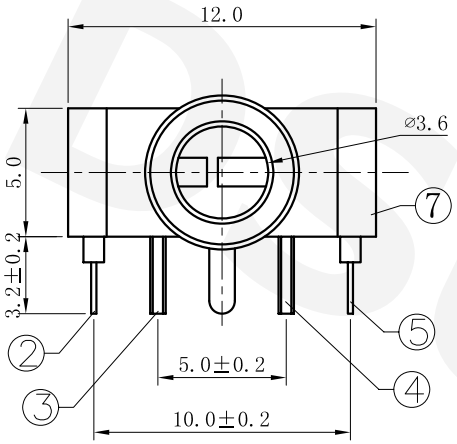

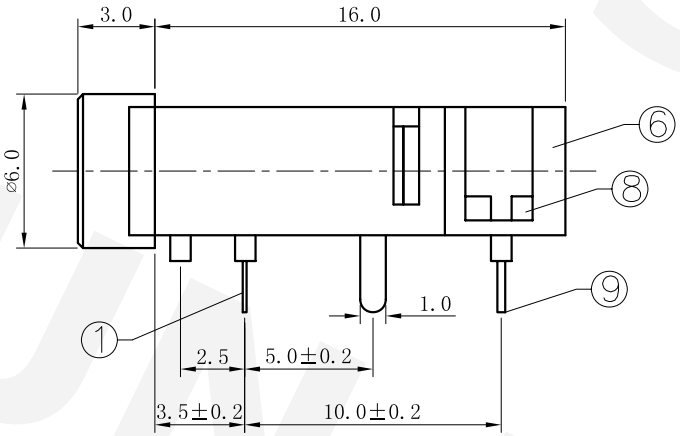

P.C.B Layout
(Top view)

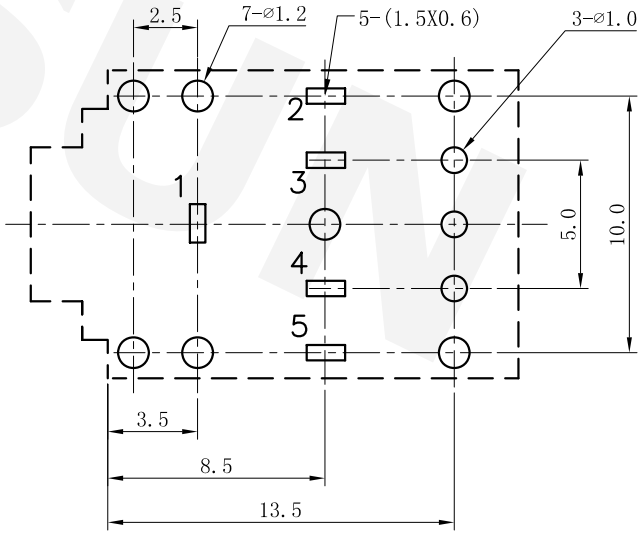

Schematic

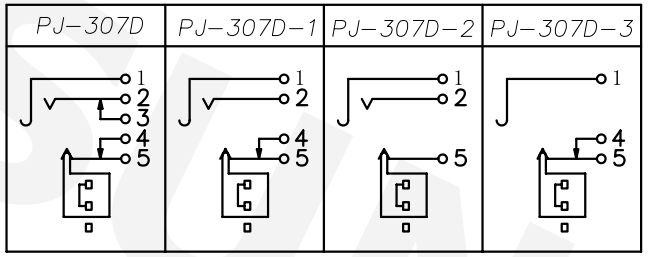

NO.	DESCRIPTION	QTY	MATERIAL	PLATING
⑨	Switch Foot	3	BRASS	Ag-Plating
⑧	Switch Cover	1	PF	
⑦	Housing	1	PBT	
⑥	Switch Housing	1	POM	
⑤	5# terminal	1	Brass	Ag-Plating
④	4# terminal	1	SUS	Ag-Plating
③	3# terminal	1	Bronze	Ag-Plating
②	2# terminal	1	Brass	Ag-Plating
①	1# terminal	1	Brass	Ag-Plating

东莞市鼎尚电子有限公司
DONGGUAN DSUN ELECTRONICS CO.,LTD.

UNIT:MM	TYPE: ⌀3.5 PHONE JACK			
	MODEL NO: PJ-307D			
PAPER NO: A4	TOLERANCE	ANGLES	SCALE	VER
PAGE 1 OF 1	±0.3	±2°	FULL	03
DESIGNER BY: KING LI	CHECK BY: XIAOMING HU		APPROVED BY: RONG zhon	